Lineux Toolchanger

LINEUX
- lee-knee-yurks
(noun)

toolchanger that print things you never know you need in a way you never imagine

- see also wizardry, mesmerizing

Lineux Stealth R2T Build Guide

2025-02-06

https://discord.gg/Xwqbjj4VjH

https://github.com/Bikin-Creative/Lineux-Toolchanger

A big thank you to everyone who made this project possible.

CAUTION

- Please take careful precautions with safety in mind when attempting to build Lineux.
- Only attempt the build if you are knowledgeable with 3d printer mechanics and electronics.
- Failure to follow safety precautions may result in things going against you, or even harm you.
- Magnets are extremely strong and may cause injuries. Please handle them with extra care.
- If things start to get confusing or you’re stuck at some point during the build, do ask questions on our discord.
- We try to keep things as simple and as clear as possible for a fun and enjoyable build for everyone.
- We are humans and are prone to mistakes. If you encounter any issues/faults with the build guide, please raise them on our Discord.

Introduction 05
Hardware 07
Preparation 09
Toolhead 12
LED Assist Tool 45
Toolboard Wiring 50
Completion 53

Part Printing Recommendations

Recommended setting/material to print your parts.

Material
ABS

Layer Height
0.2mm

Extrusion Width
0.4mm

Infill
40% (Grid, Gyroid, Honeycomb, Triangle, Cubic)

Number of Walls
4

Number of Top/Bottom
5

Parts Filename Guide

Primary Colour

Eg. carriage_A.stl

These are to be printed with your primary/base colour.

Accent Colour

Eg. [a]_locking_plate.stl

Files with [a] in front are to be printed with your secondary/accent colour. Parts will be indicated with the Lineux Logo beside it in this guide.

Quantity Required

Eg. belt_tensioner_x2.stl

Files ending with x# indicate the quantity required to be printed

To make your build easier, we recommend you to download the cad from our github to enable you to visualize the whole assembly.

Button Head Cap Screw (BHCS)

Socket Head Cap Screw (SHCS)

Heat Insert

n52 Magnet

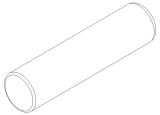

Dowel Pin

Ring Terminal

Set Screw / Grub Screw

Hex Nut

Cap Nut / Dome Nut

Lineux was first developed on a Vzbot 330 printer.

It is recommended to install all heat inserts first on all the parts prior to starting the build.
The build guide is for R2T setup with Revo Voron, Sherpa Micro, EBB36 and Klicky.

Toolhead

m3 heat insert

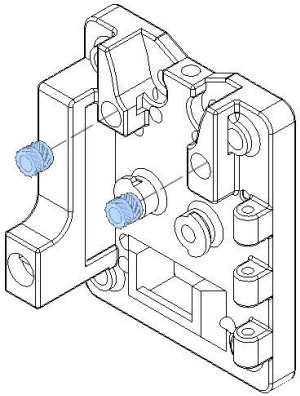

m4 heat insert

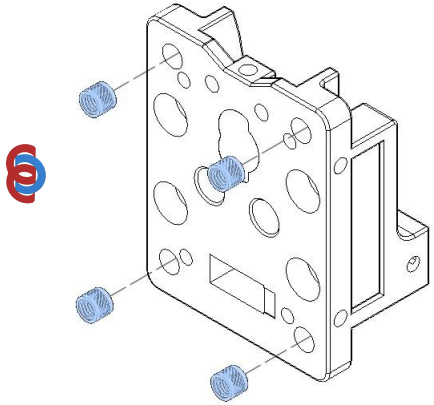

Preparation
Insert the heat insert to the Backplate in the respective slots as shown.

m3 heat insert

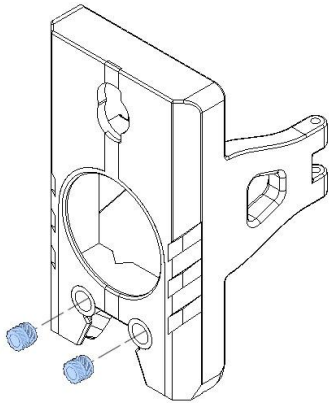

Preparation
Insert the heat inserts to the Cowl Klicky.

Toolhead

m3 heat insert

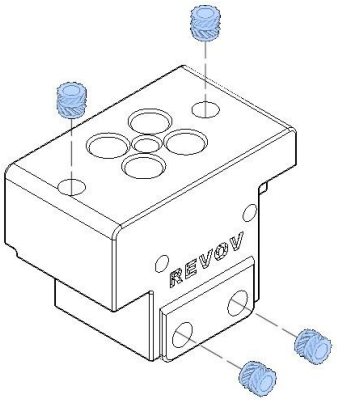

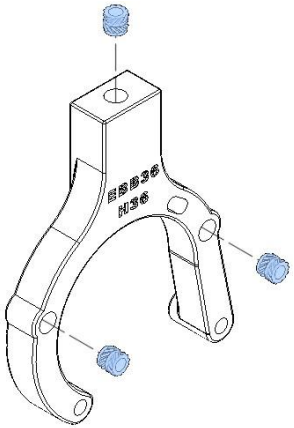

Preparation
Insert the heat inserts to the Revo Voron Plate.

Preparation
Insert the heat inserts to the Sherpa Micro Ebb Mount.

Lineux originally started with a modified Dragonburner toolhead, but has since transitioned to using its own **Lineux One** toolhead.

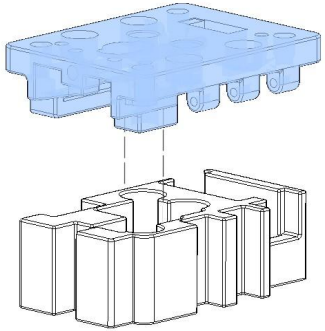

Place the Backplate on the Magnet Mounting Tool. This will make installing the magnets easier.

8x5mm n52 magnets

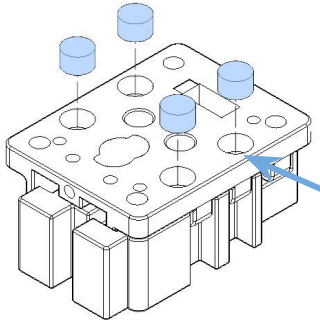

Insert the magnets in the respective slots. Apply a bit of epoxy or glue before inserting the magnets. You may use a mallet or a wrench to push the magnets in and ensure they are flushed with the top surface. Take note of the magnet polarity configuration. Ensure they are the opposite polarity to the configuration on your Locking Plate. This will enable the respective magnets to attract when the Toolhead is engaged to the Carriage.

Magnet Mounting Tool

Magnet Polarity Configuration

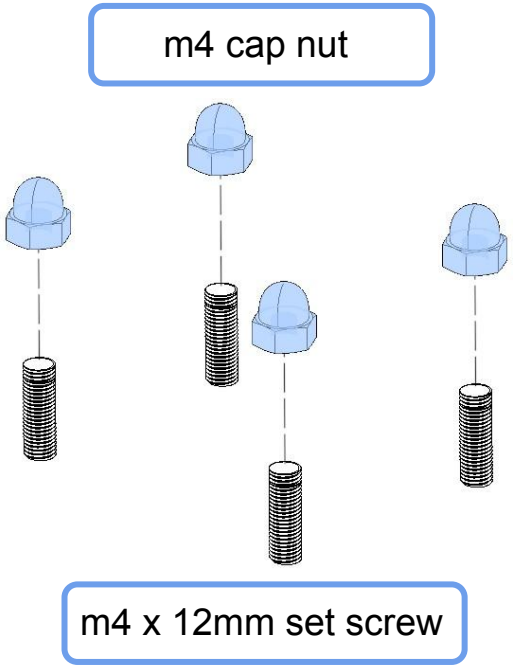

Preparation
Screw in the set screw to the cap nuts. Apply loctite before screwing.

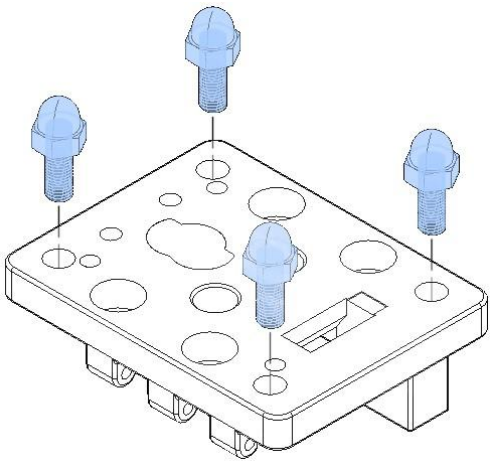

Apply just a bit of Loctite on the set screw thread close to the cap nut before installing. The set screw will screw through the heat insert and into plastic. Be careful not to allow the Loctite to touch any printed part of the Backplate as it will degrade the material.

*** This step is only applicable if you are running Lineux on Fysetc CNC Tap**

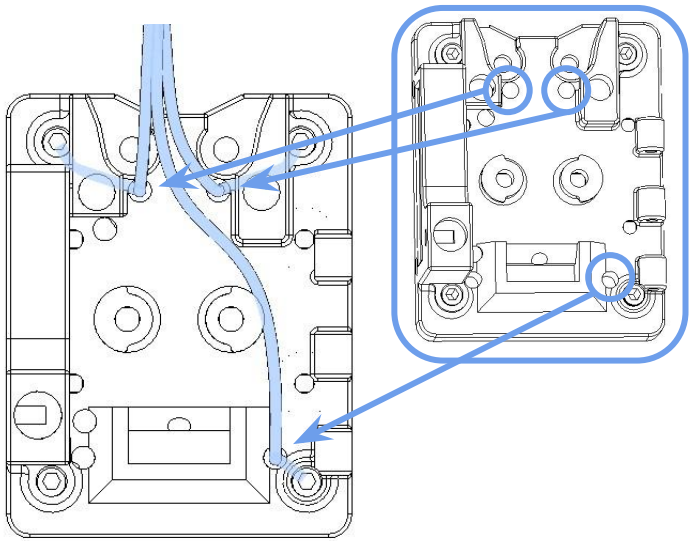

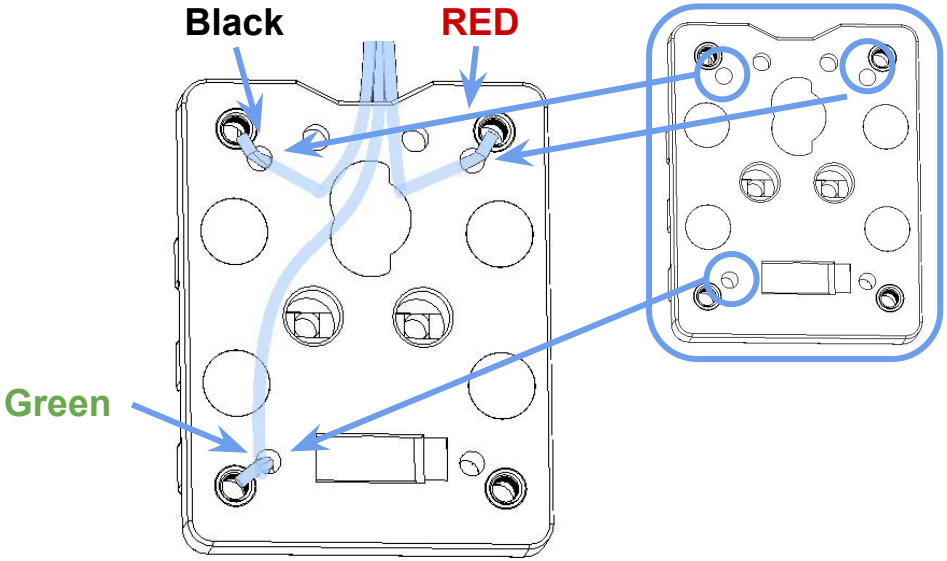

Before inserting the m4 cap nuts, stripped 3 wires and insert them into the indicated holes. Ensure the stripped ends are below the m4 cap nuts location.
Take note of the wire polarity.

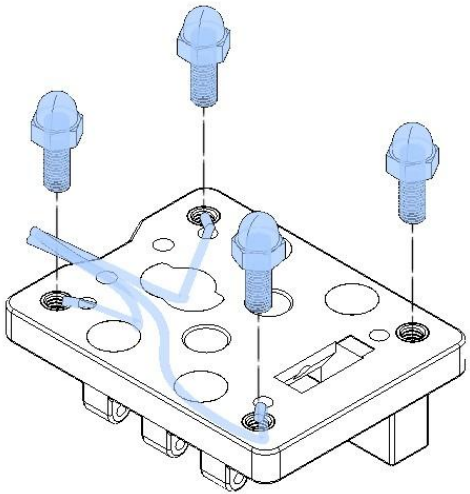

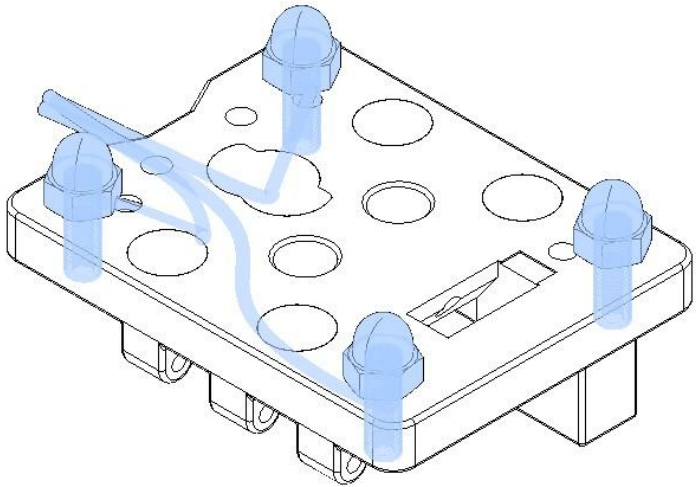

Screw in the cap nuts while ensuring it pinch against the stripped ends of the wires. Use a multimeter to check for continuity.

Carriage Sense

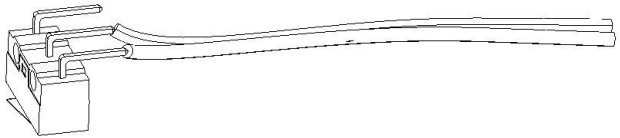

Preparation

Solder 2 wires to the 90deg micro switch. Take note to solder the wires to C and NC pin on the micro switch. Different supplier may have different pin array.

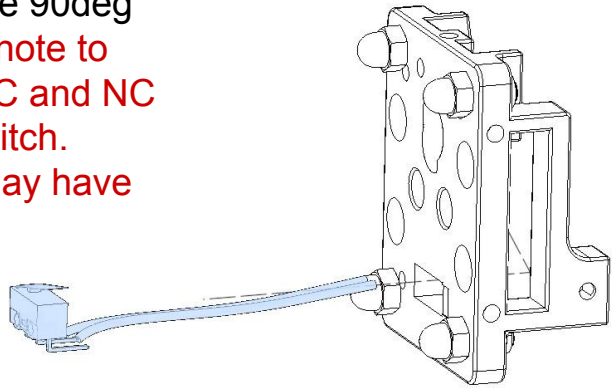

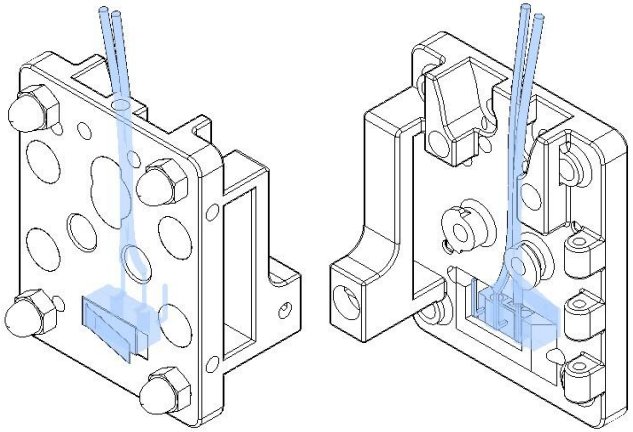

Thread the wire into the cutout slot and rotate the switch as you push it in. It should sit all the way in the slot.

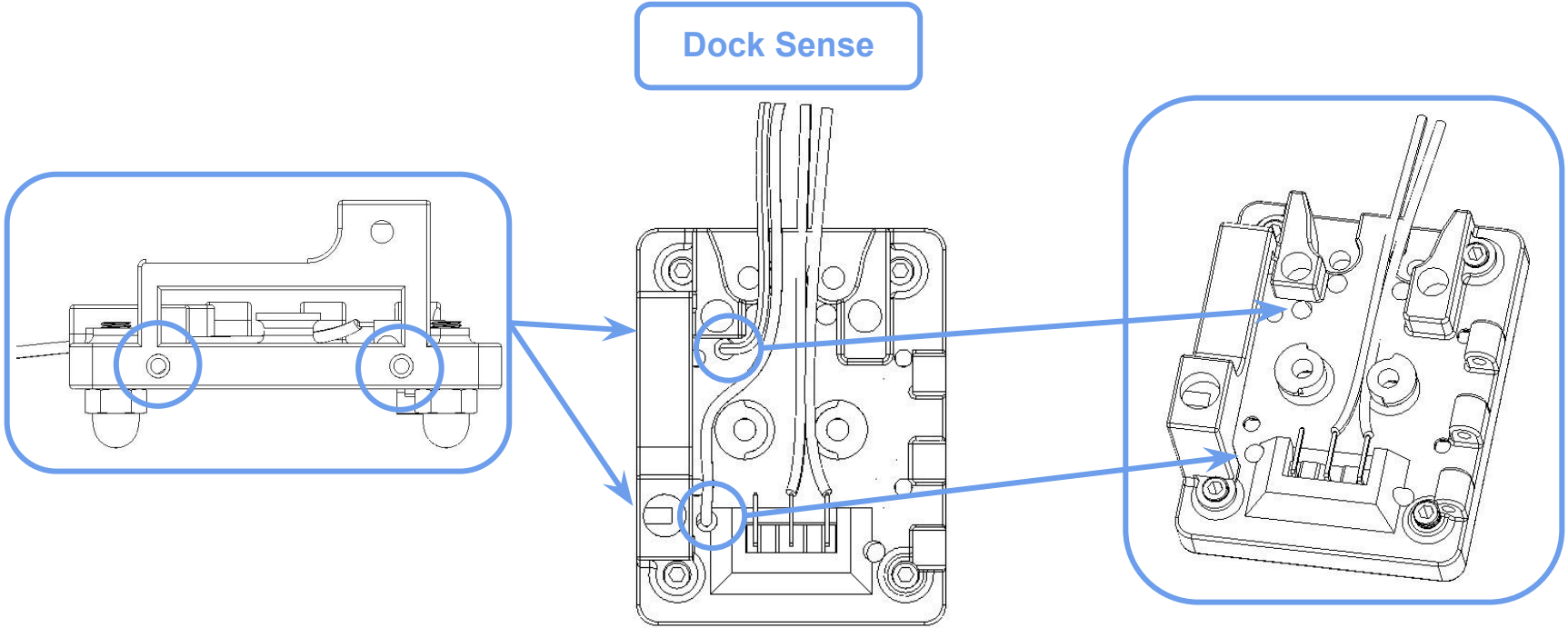

Strip the end of 2 wires and thread them into the wire slot. Ensure the stripped ends exit into the dowel slots.

m3 x 14mm dowel pin

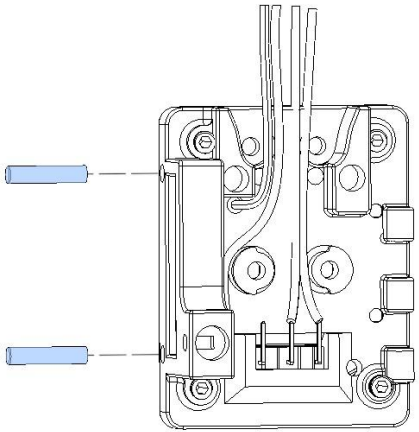

Apply a bit of glue before inserting the dowel pins. Ensure the dowel pins are resting and pushed against the stripped end of the 2 individual wires. Use a multimeter to check for continuity.

Dock Sense

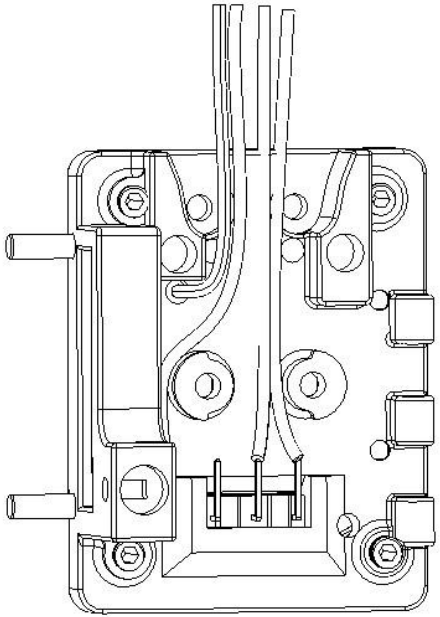

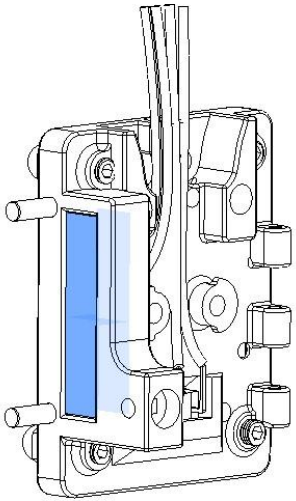

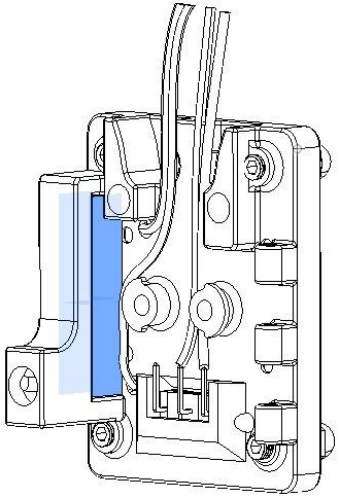

Remove the 2 cutaway support included in the Backplate during printing.

Part Cooling Fan Connector

ring terminal ot1.5-3

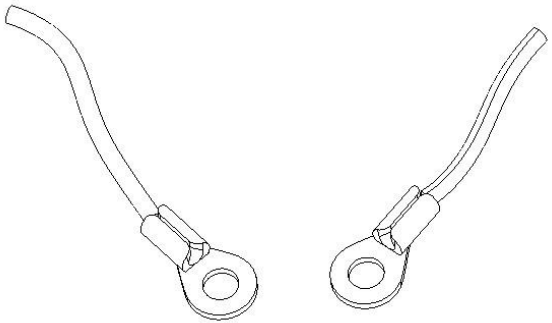

Preparation

Crimp 2 wires to both ring terminals.

m3 x 8mm bhcs

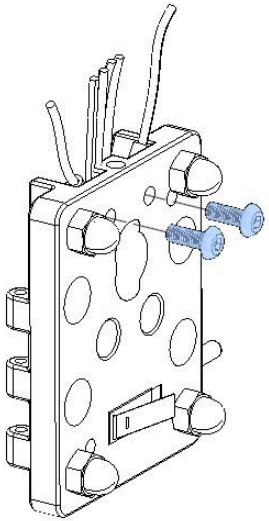

Part Cooling Fan Connector

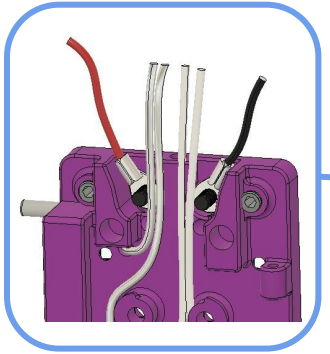

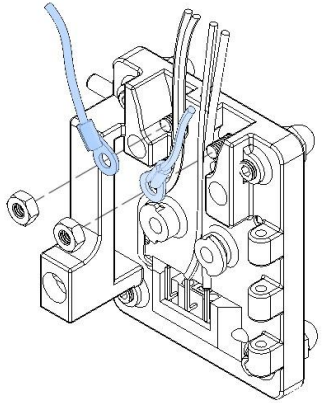

Slide the ring terminals on the bolt.
Ensure the wires colours matched the spring wires on the carriage that you installed earlier as these will determine voltage and ground for the part cooling fan.

m3 hex nut

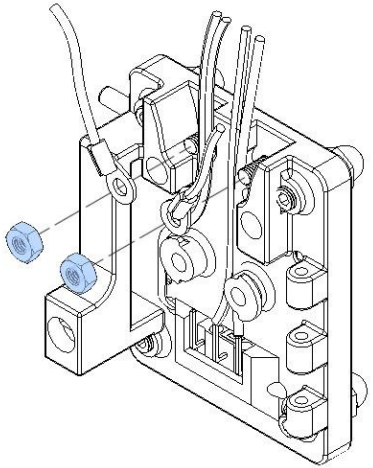

Secure the ring terminals.

m3 x 40mm bhcs

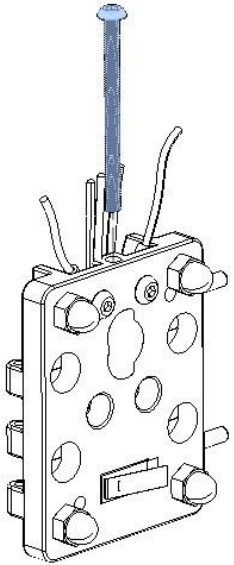

Do not overtighten as you are screwing into plastic.

6x3mm n52 magnets

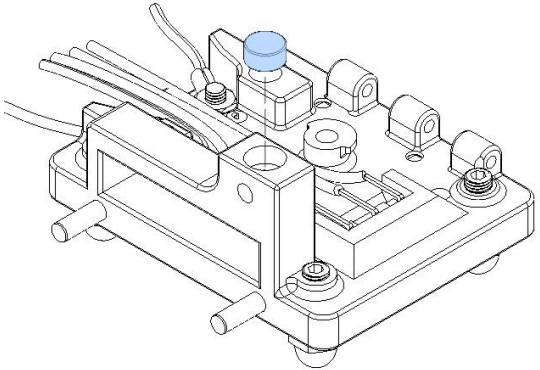

Apply glue before pushing in the magnet. Ensure they sit flushed in the slot.

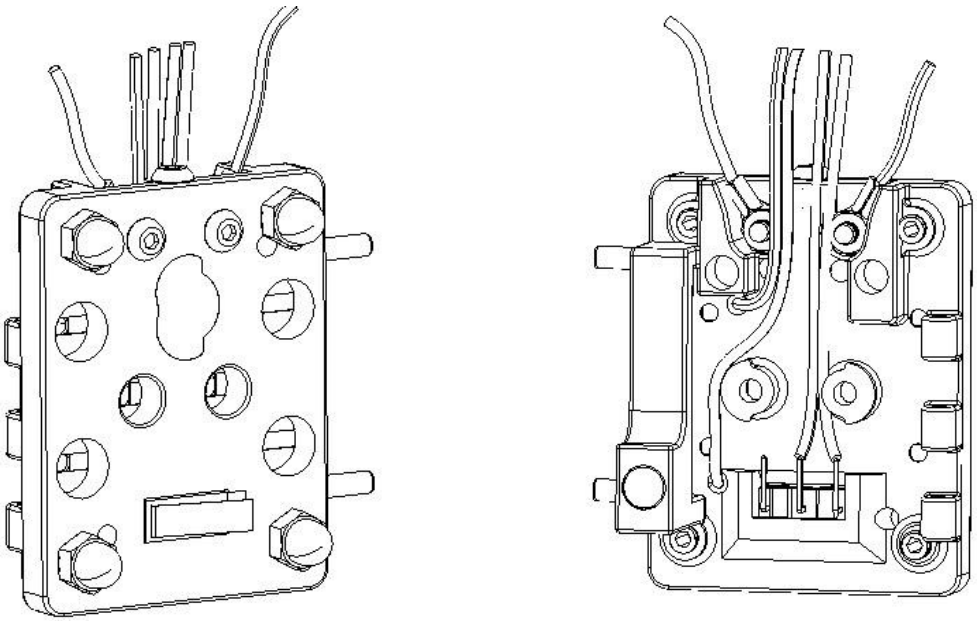

Completed Backplate assembly.

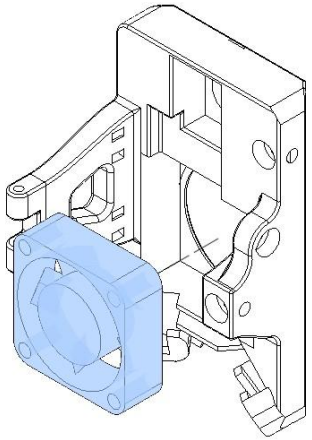

Slot in the 3010 fan into position.

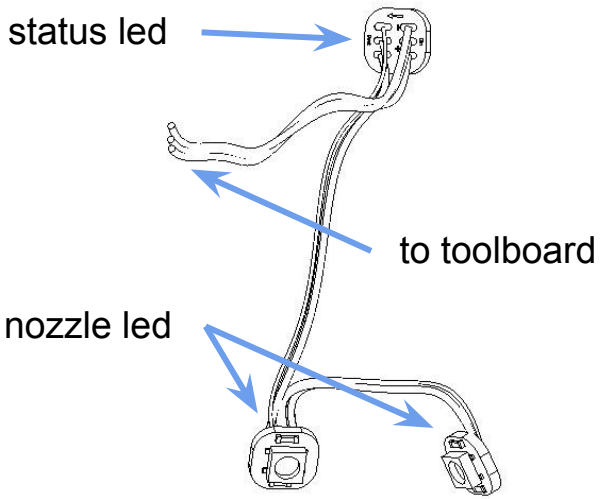

Preparation

Wire the neopixel leds in this array. The first led from the toolboard will be the status led and the next 2 are the nozzle leds. (Refer to page 45 for the guide on how to use the Led Assist Tool.)

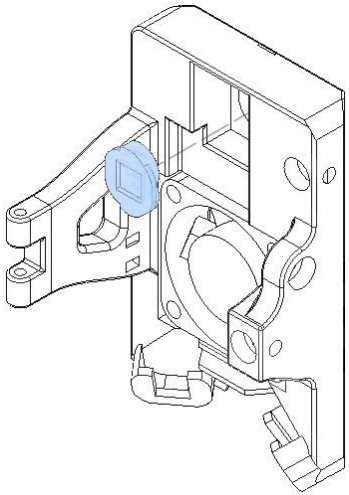

Slot in the Led Diffuser.

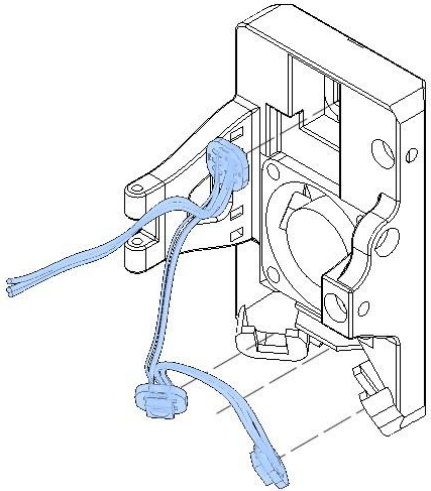

Insert the leds into position in their respective slots.

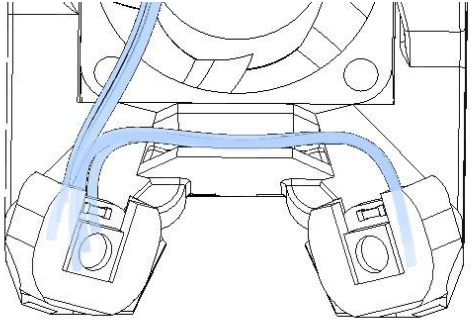

You can tuck in any excess wire in the wire channel.

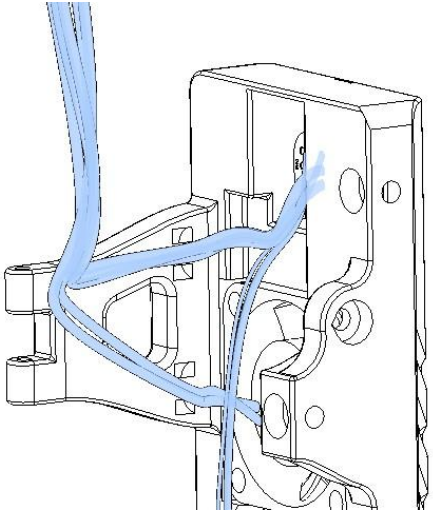

Route the fan and led wires along the side arm of the Cowl. You will cable tie the wires together later.

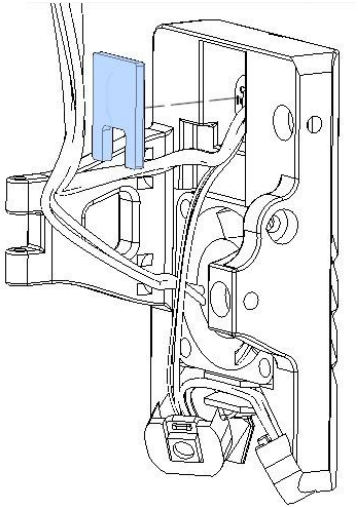

Cover the status led with the Led Stopper.

6x3mm n52 magnets

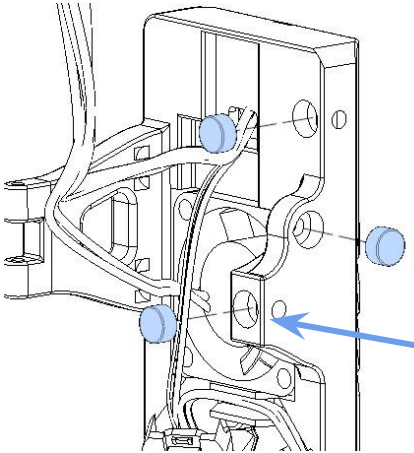

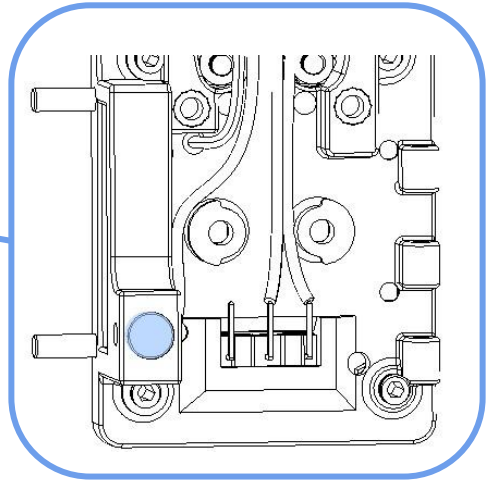

Apply a bit of glue/epoxy before inserting the magnets. Take note of the indicated magnet. Ensure the polarity matches the magnet on the Backplate that you install earlier. They should be attracted to each other.

*** This step is for Klicky Probe. You may skip this if you are not using Klicky Probe.**

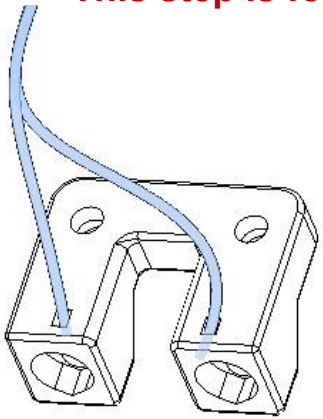

Strip the end of 2 wires and thread them into the 2 holes in the Klicky Mount.Ensure the stripped exposed end are fully inside the magnet slot.

6x3mm n52 magnets

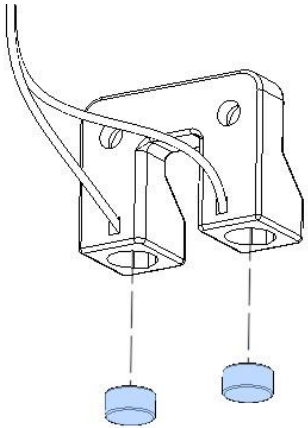

Apply a bit of glue before inserting the magnets. Ensure the magnets are touching the stripped ends of the wires. Use a multimeter to check for continuity.

m3 x 6mm shcs

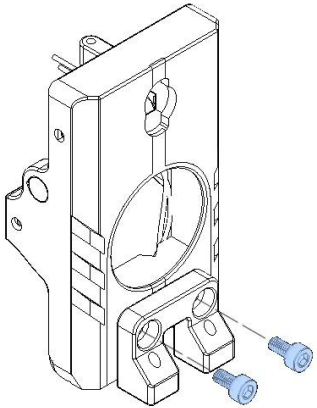

Attached the Klicky Mount to the Cowl.

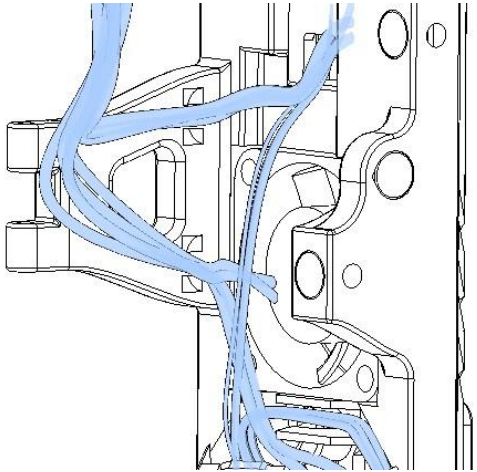

You can now cable tie the led wires, fan wires and klicky wires together on the cowl arm.

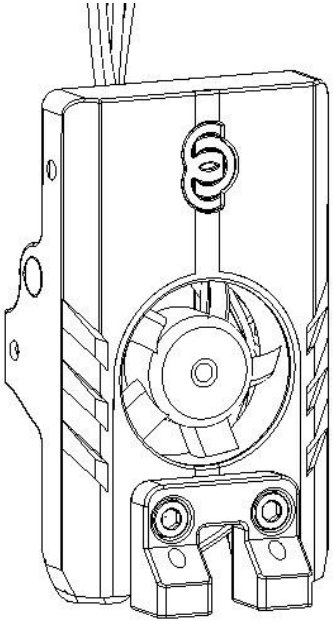

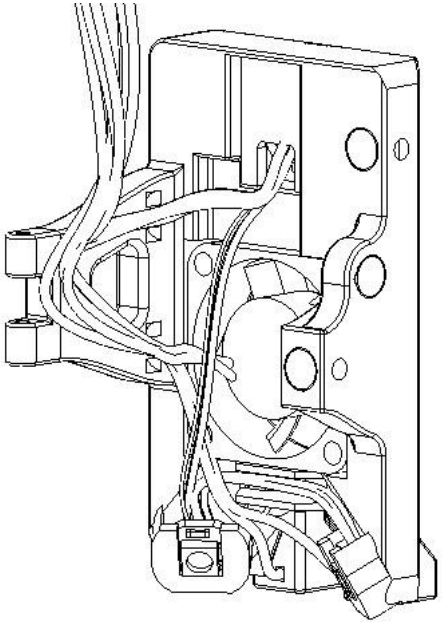

Completed Cowl Assembly

*** This guide is showing the Revo Voron hotend. Other hotends may require different printed parts, hardware or steps.**

6x3mm n52 magnets

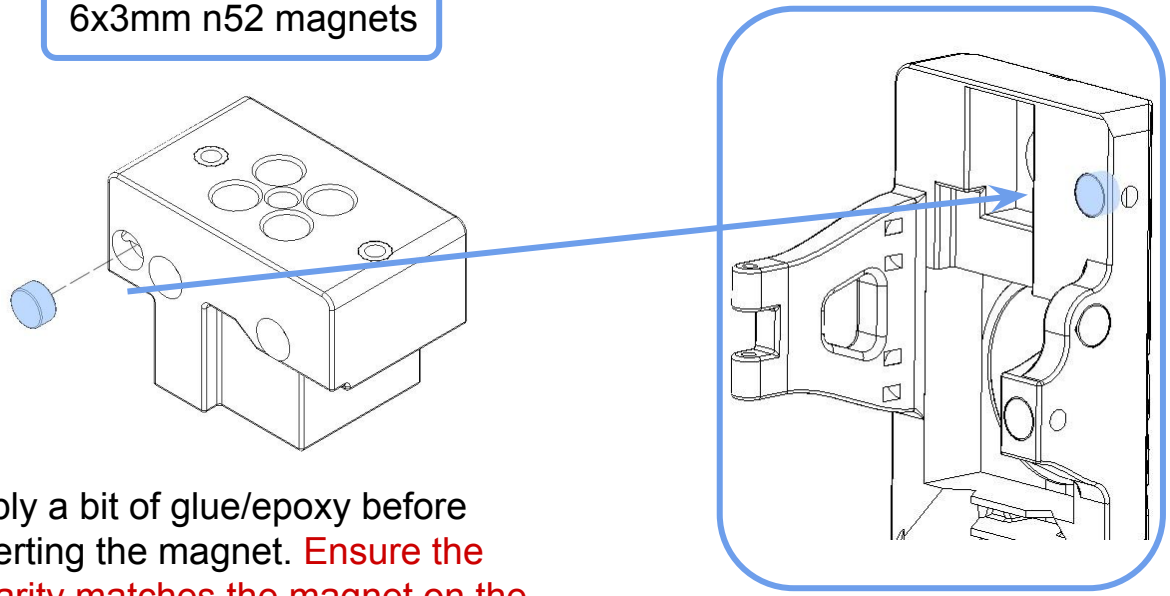

Apply a bit of glue/epoxy before inserting the magnet. Ensure the polarity matches the magnet on the Cowl that you install earlier. They should be attracted to each other.

m3 x 8mm shcs

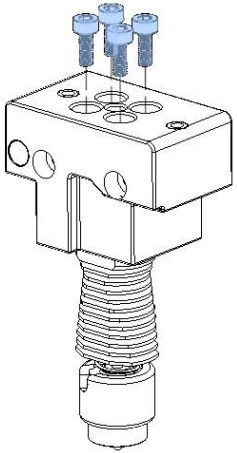

Attached the Revo Voron hotend.

Ptfe tube 47mm

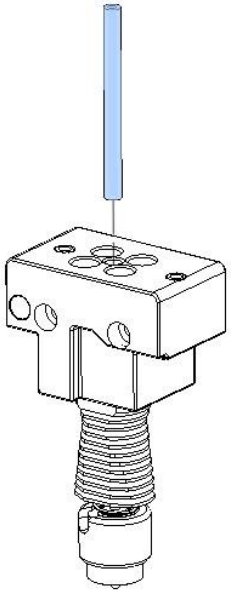

Slide the Ptfe tube fully in.

* This guide is showing the Sherpa Micro Extruder. Other extruders may require different printed parts, hardware or steps.

m3 x 18mm shcs

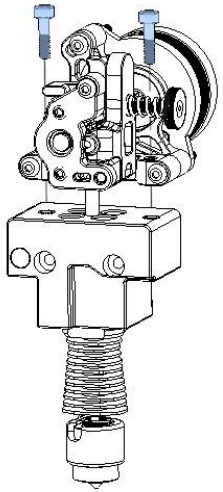

Secure the Sherpa Micro Extruder to the assembly.

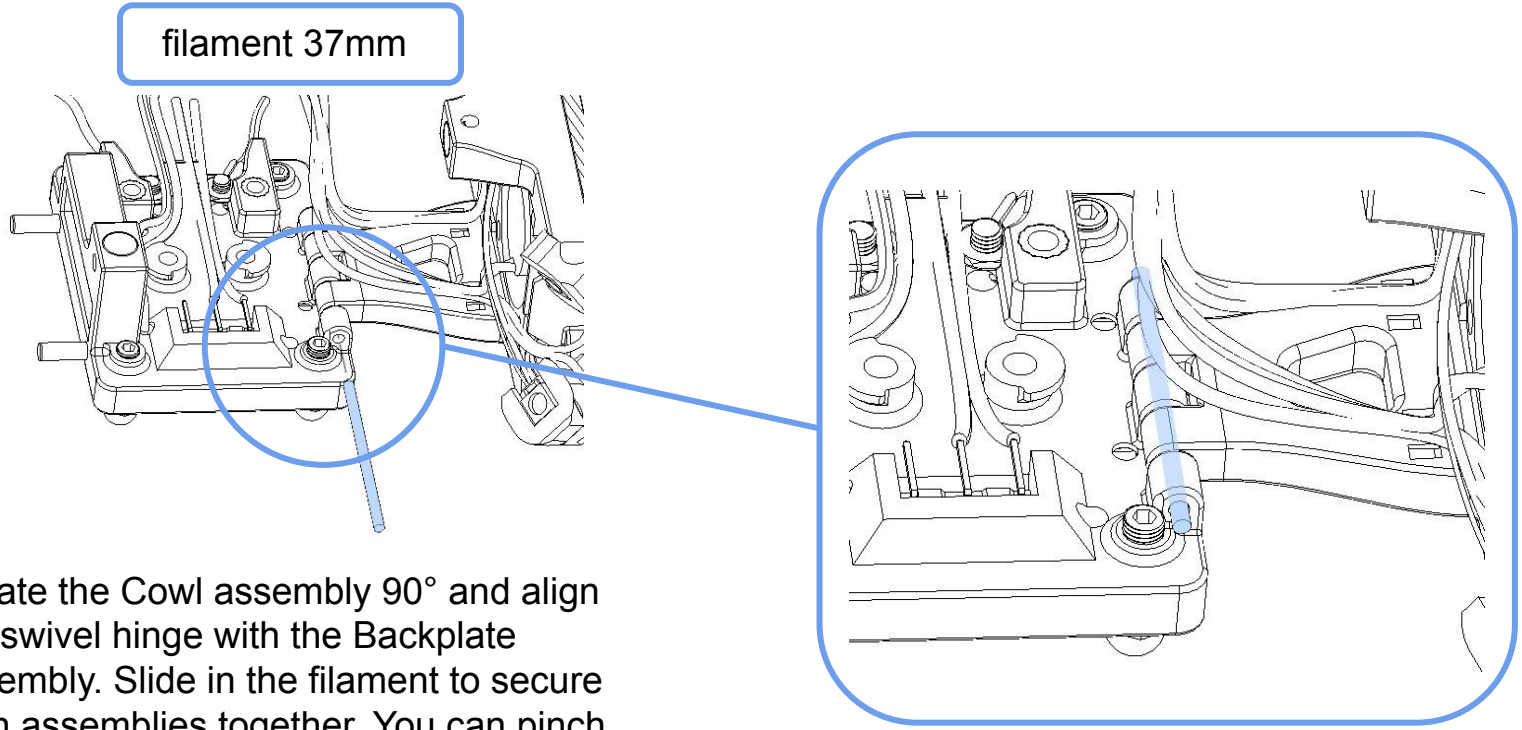

Rotate the Cowl assembly 90° and align the swivel hinge with the Backplate assembly. Slide in the filament to secure both assemblies together. You can pinch both ends of the filament using a plier to secure it in place.

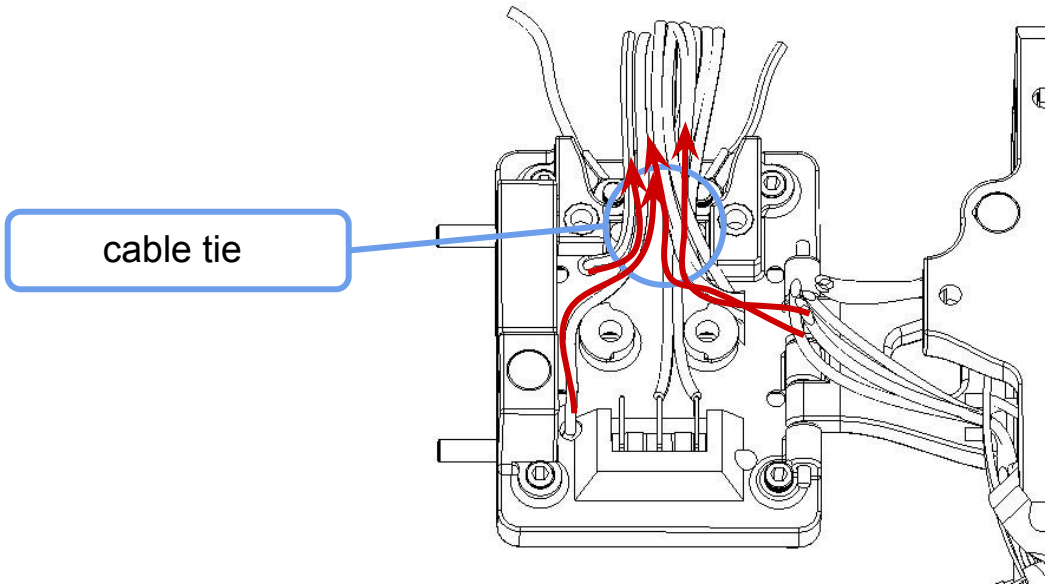

Route all the wires from the Cowl into the middle channel of the Backplate as shown. Keep the Cowl in the 90° position.

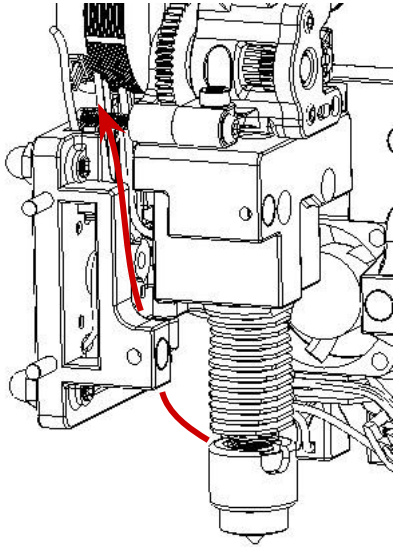

Position the hotend assembly closer to the Backplate and route the hotend and thermistor wires through the middle of the Backplate and upwards similar to the rest of the wires.

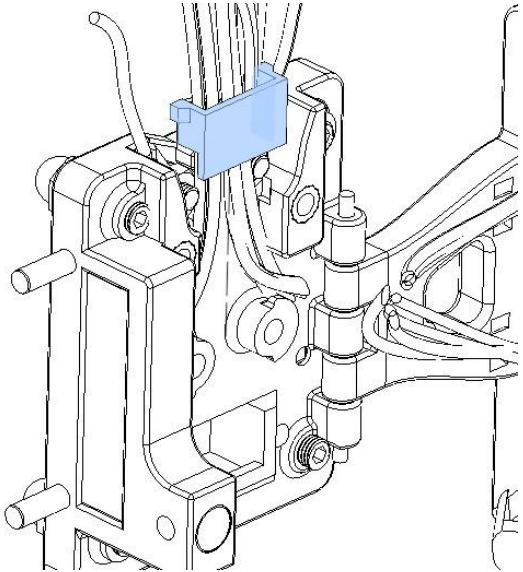

Once all wires are in position, you can slide down the Cable Helper to secure the wires in place.

m3 x 25mm shcs

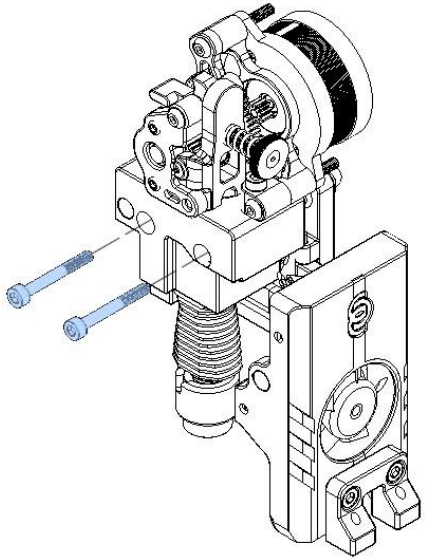

m3 x 10mm bhcs

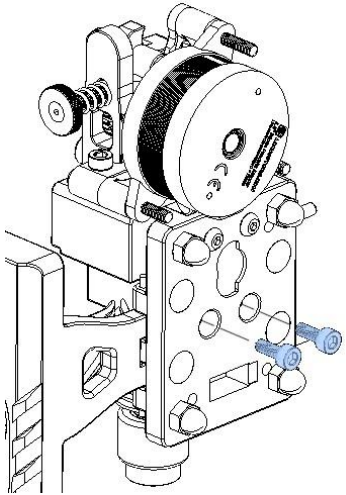

Secure the hotend/extruder assembly to the Backplate.

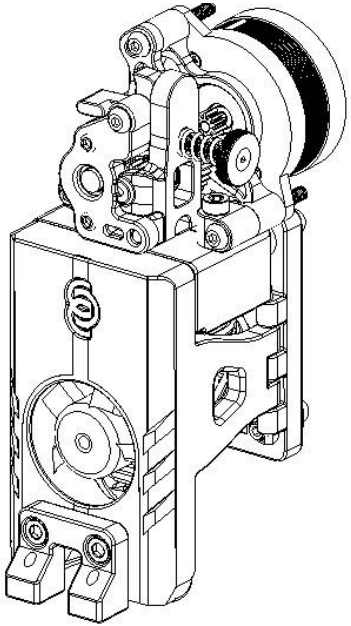

Close the Cowl. It should stay securely in place via the magnets.

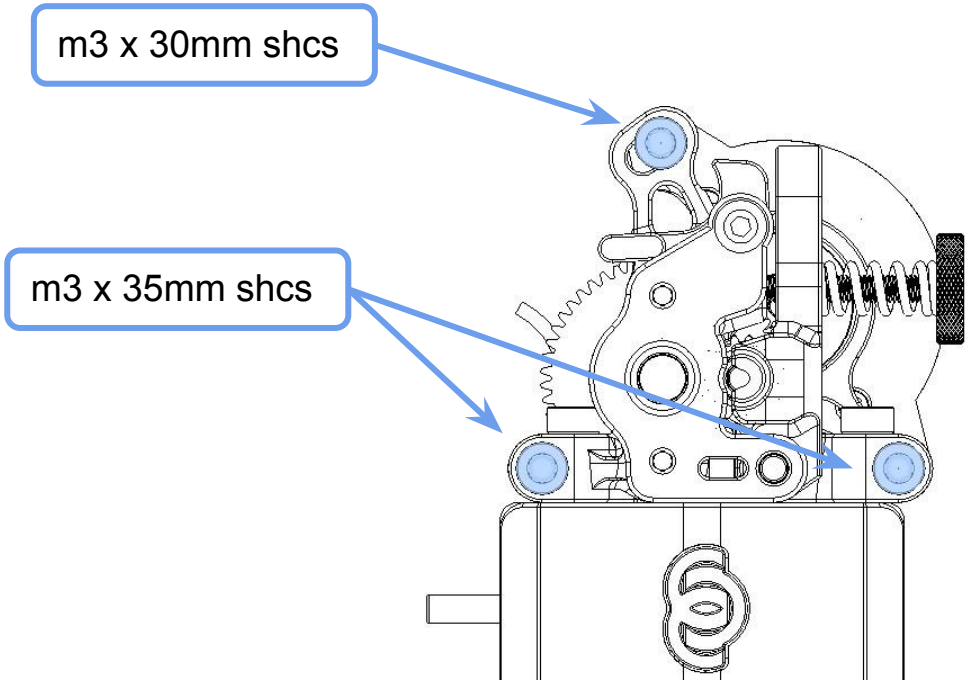

Replace the 3 bolts of Sherpa Micro extruder to the replacement size of screws shown.

* This guide is showing the Bigtreetech Ebb36 toolboard. Other toolboards may require different printed parts, hardware or steps.

m3 hex nut

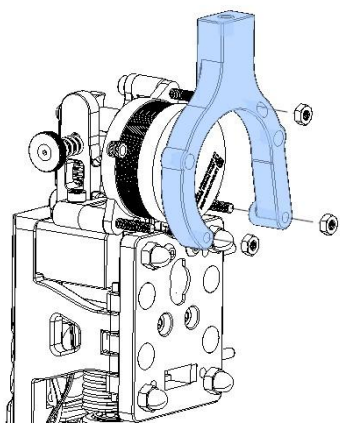

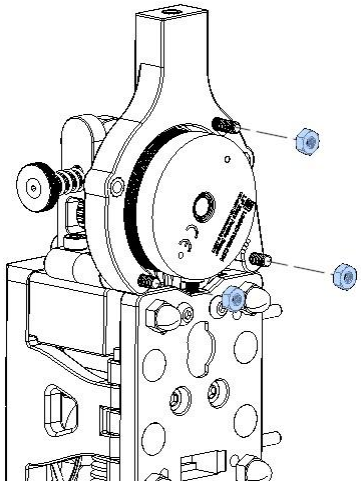

Attach the Sherpa Micro Ebb Mount to the extruder and secure them with the hex nuts.

Toolboard Spacer

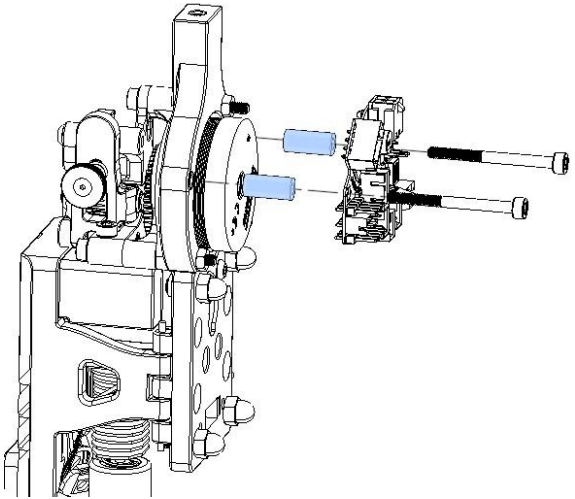

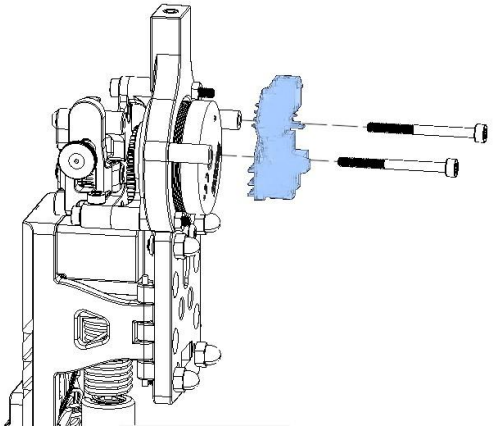

m3 x 35mm shcs

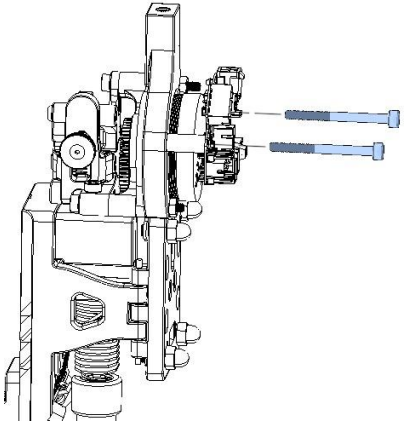

Temporary attach the Ebb36 to the Ebb36 mount.

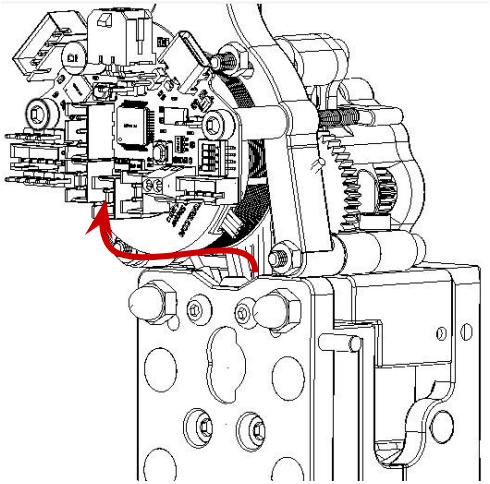

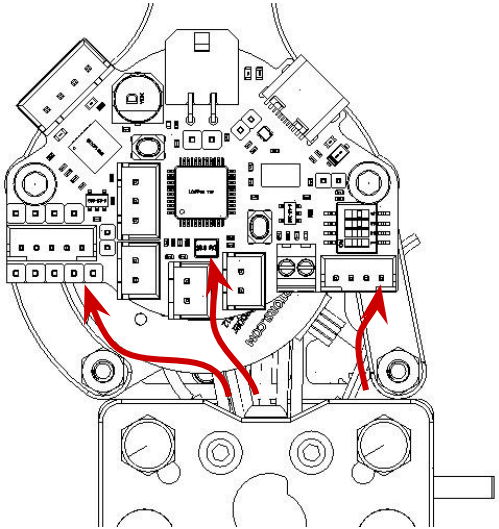

Route all the wires from the Backplate and connect them to their respective connectors/pins on the toolboard. Trim the wires as required and crimp their appropriate connector. Refer to the toolboard wiring diagram (page 107) for reference.

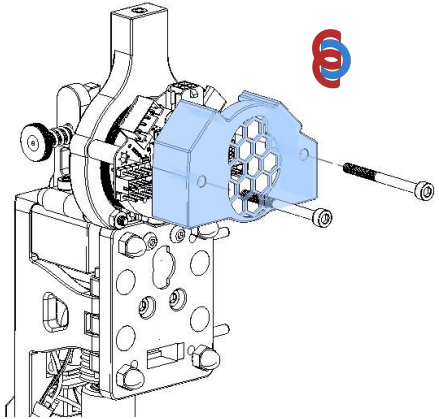

Remove the 2 bolts and attach the Toolboard Cover after you have connected all the wires.

m3 x 35mm shcs

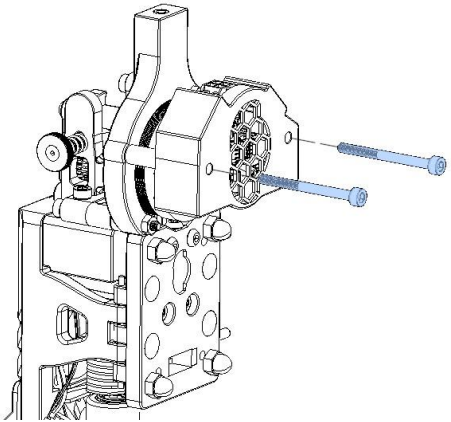

Secure the Toolboard Cover.

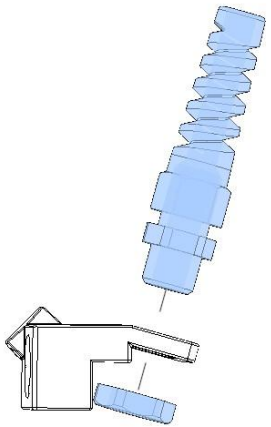

Attach the PG7 Flex Gland to the Umbilical Adapter.

m3 x 10mm shcs

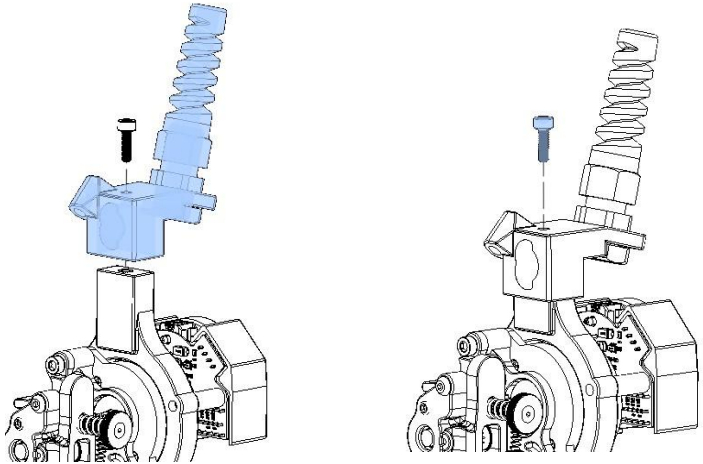

Secure the Umbilical Adapter to the Ebb36 Mount.

Completed Toolhead Assembly

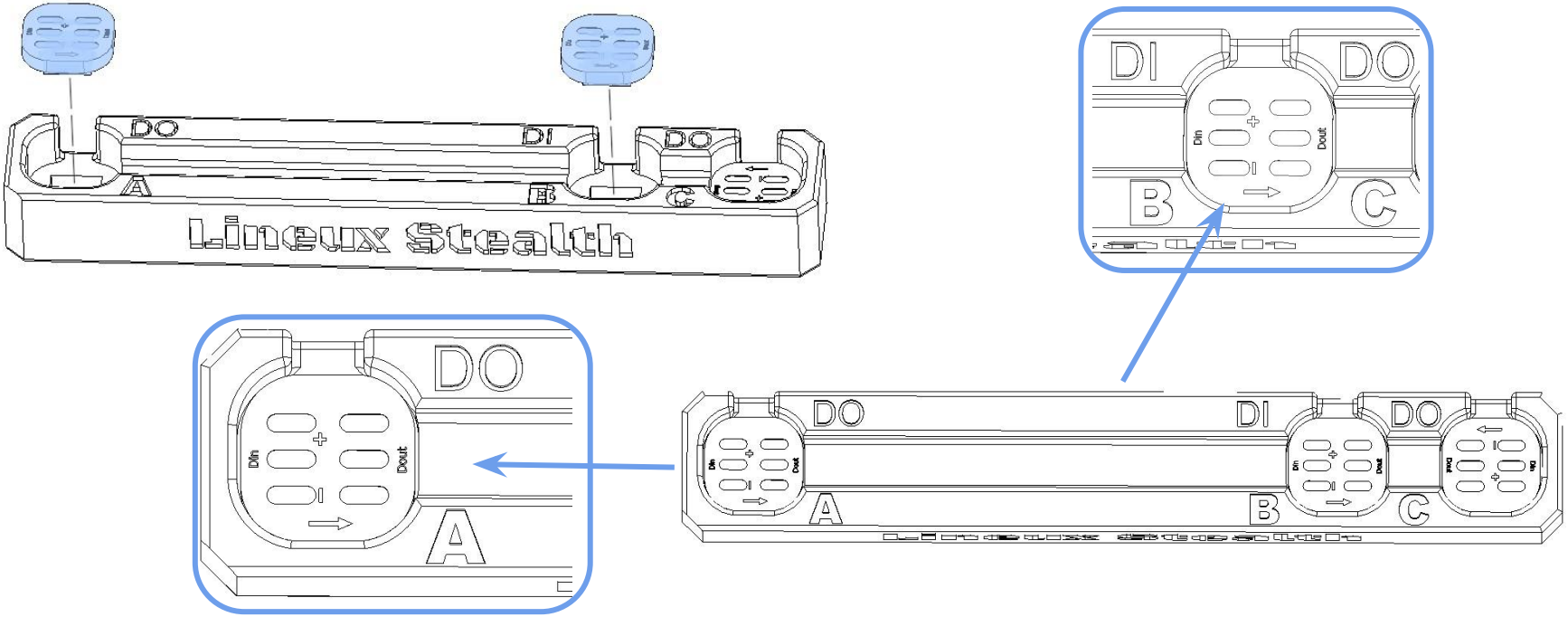

Place 2 leds into A and B slot as shown on the Led Soldering Jig. Pay attention to the orientation of the direction on the Leds.

Solder 3 wires as shown. The wiring should be from **DOUT** of A to **DIN** of B.

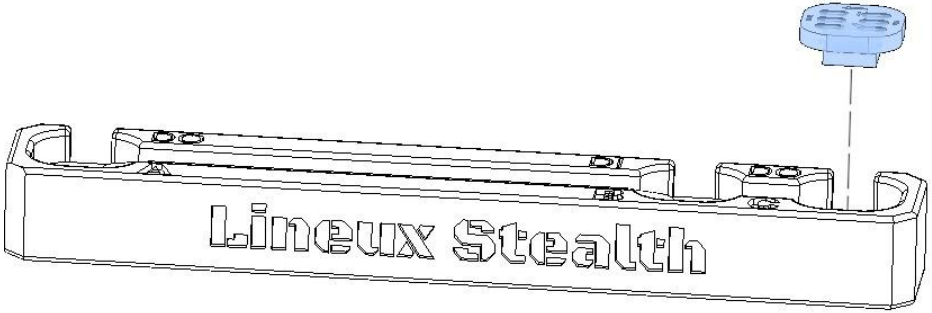

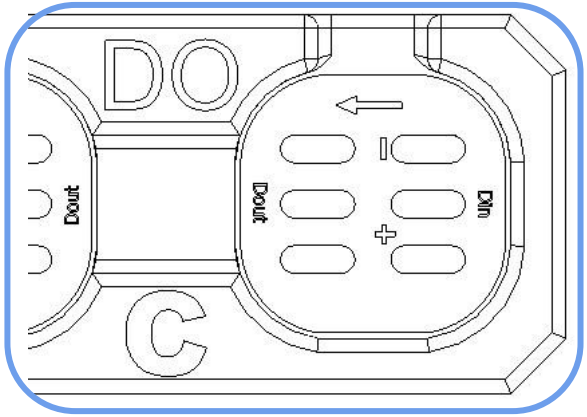

Place the next Led into the C slot as shown. Pay attention to the orientation of the direction on the Led.

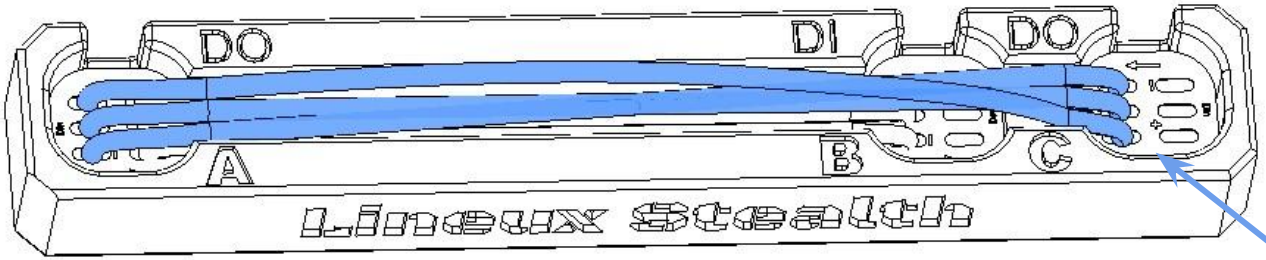

Solder 3 wires as shown. The wiring should be from **DIN** of A to **DOUT** of C. Pay attention to the polarity of the wires. Ensure 5v, data and ground are soldered accordingly.

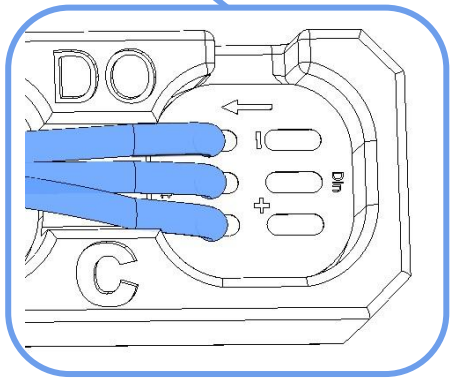

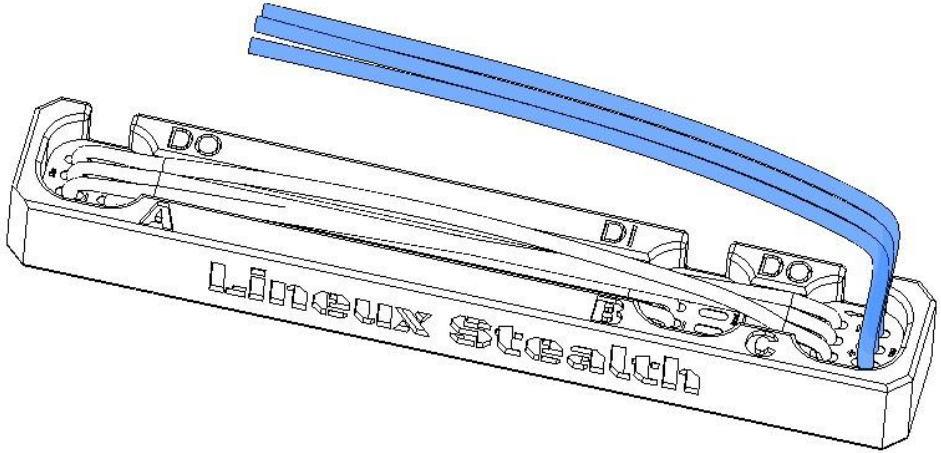

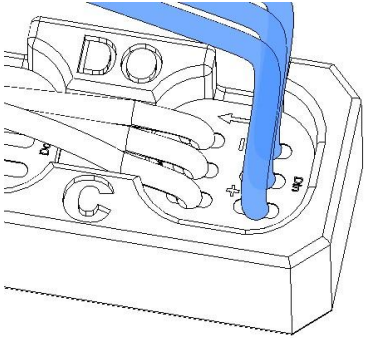

Finally, solder three wires (approximately 150 mm long) to the **DIN** of the LED in slot C. You may choose to make the wires slightly longer to provide extra slack and avoid issues if the wires are too short.

Fysect H36 v1.3

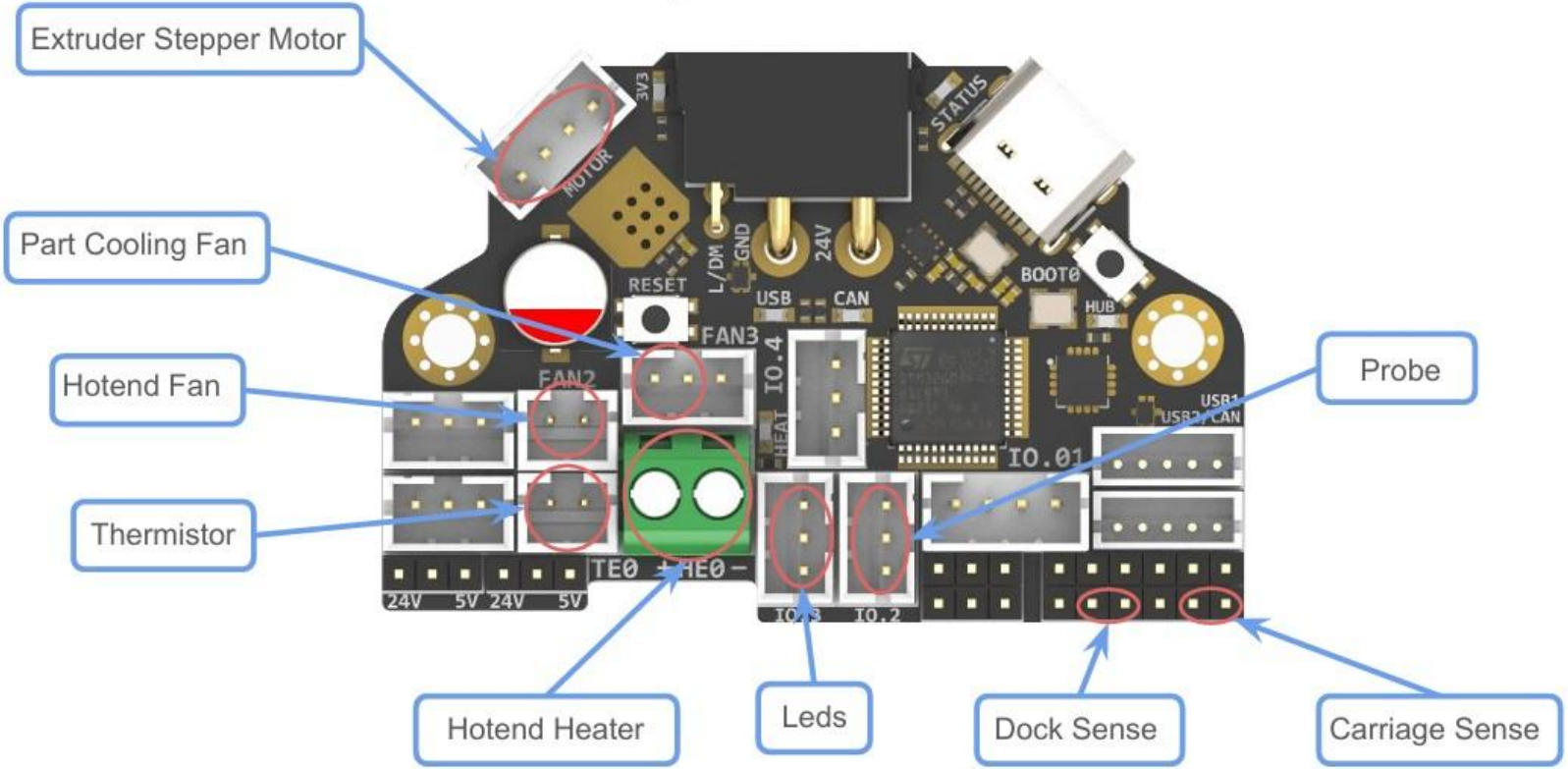

Bigtreetech EBB36 v2.1

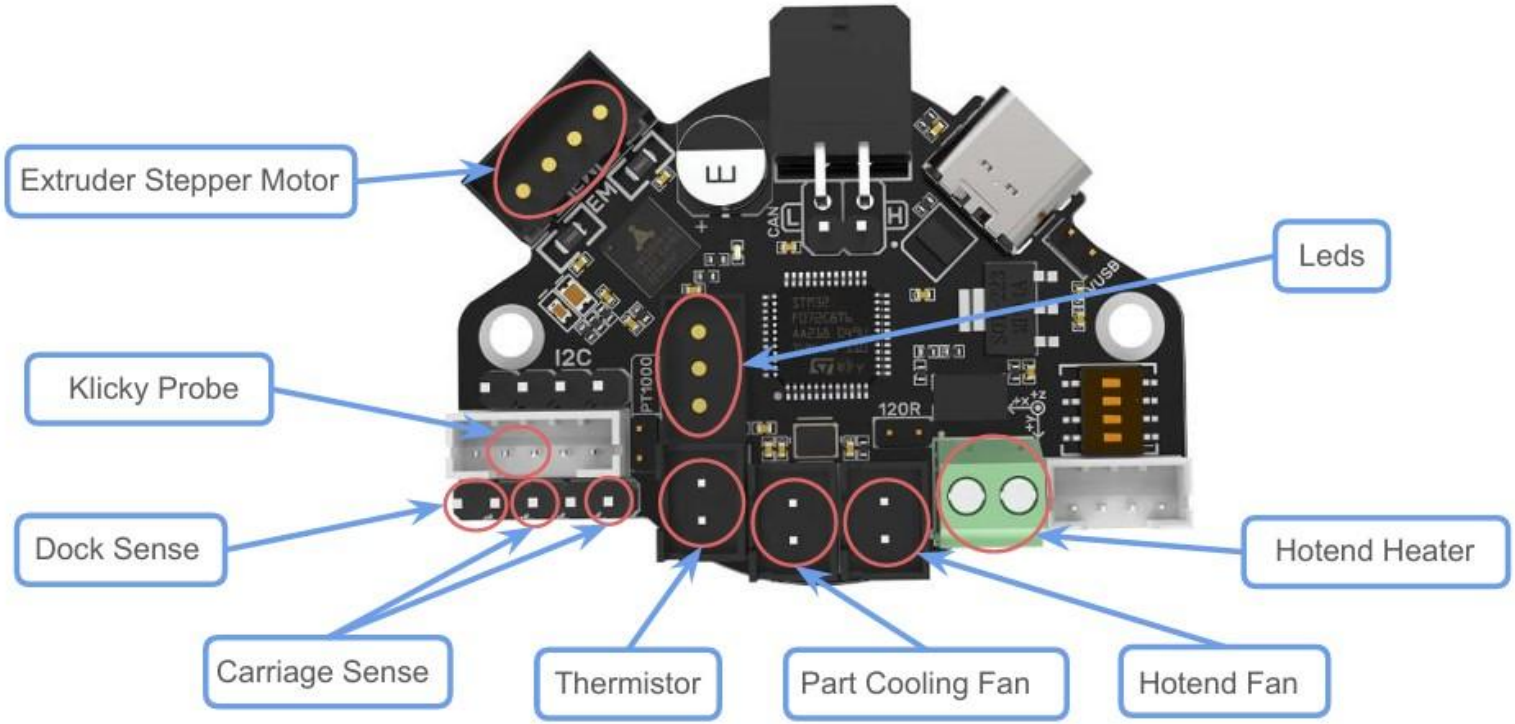

Mellow SHT36 v3

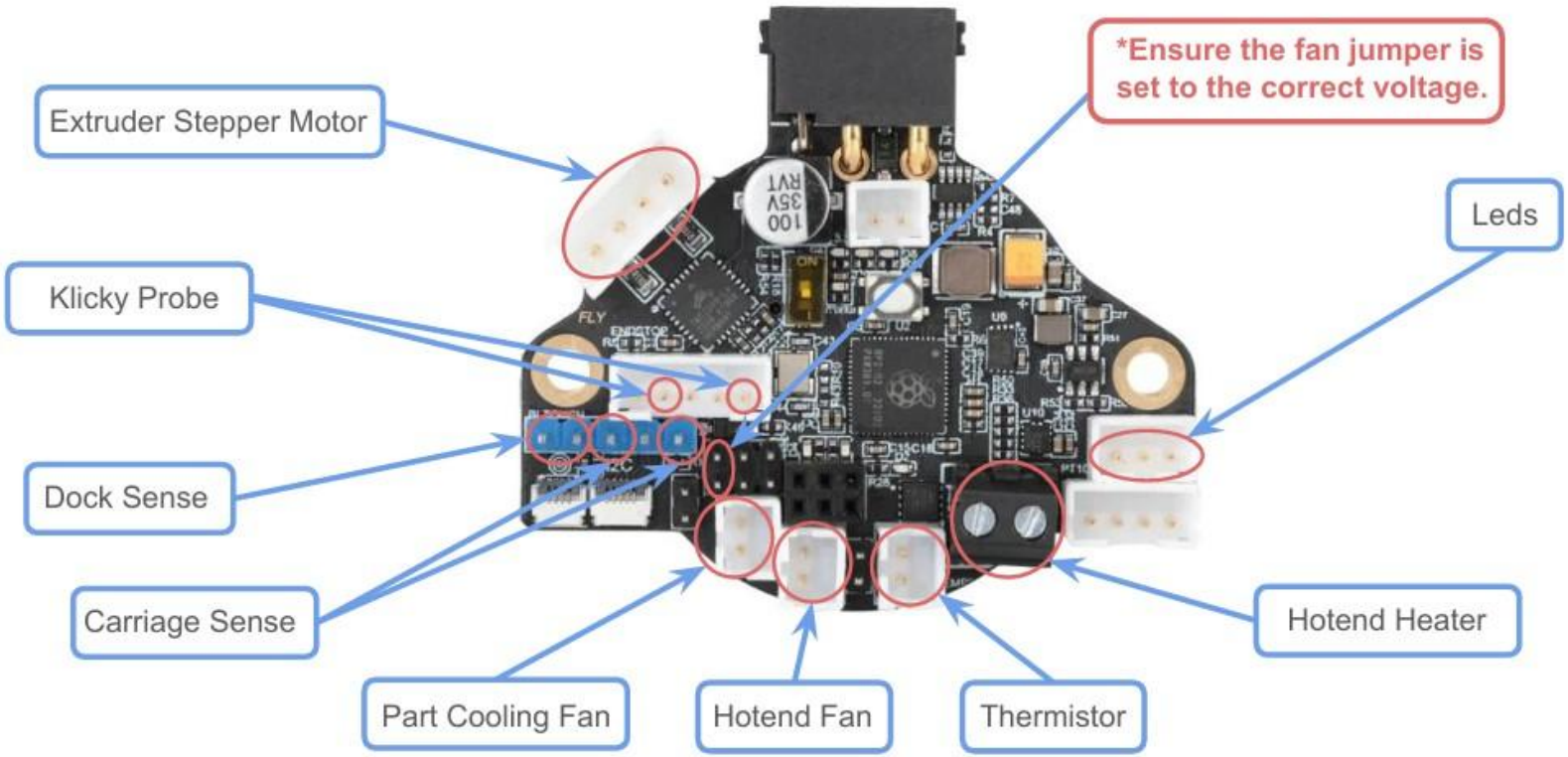

We are humans and are prone to mistakes. If you encounter any issues/faults with the build guide, please raise them on our Discord with the relevant page number or a screenshot of the issues/fault.

This guide may be subjected to changes regularly based on feedbacks from the community.

Do join us on Discord if you need help or have any questions.

Discord

https://discord.gg/Xwqbjj4VjH

GitHub

https://github.com/Bikin-Creative/Lineux-Toolchanger

DONATE

Lineux Toolchanger